Graham
TRANSMISSIONS

Ring/Roller Metallic Traction Drives

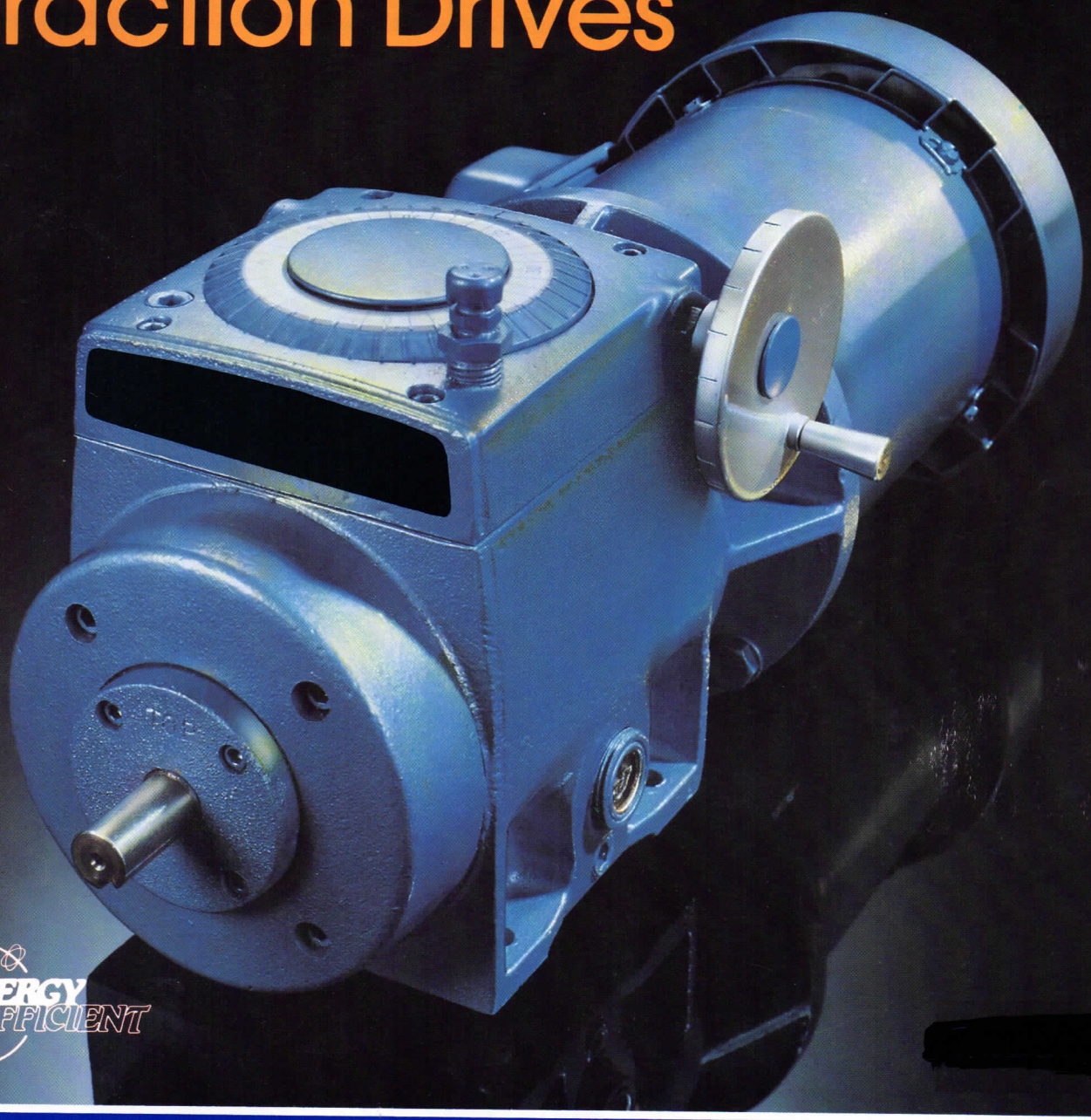

ENERGY EFFICIENT

[redacted]

Graham Transmissions, the most recognized name in metallic traction

Design Features

- **Thirty-five Turn Micrometer Handwheel**
- **Unmatched Accuracy**
- **Overload Protection**
- **Wide Choice of Controls**
- **Linear Speed Setting Mechanism**
- **Rolling Motion**
- **Torque producing elements made of ball bearing steel operate in mist of traction lube in sealed housing**

Operational Benefits

Precise speed setting to 1 part in 3500

Will hold speed to .1 of 1% of maximum speed under steady load. No pulsing or drifting

Protects itself and driven machine against damage

Mechanical, pneumatic & electric controls for manual, remote or automatic speed control

Standard controls gives near linear speed change. Exact linear control optional

High Efficiency

Low Maintenance. Nothing to adjust or replace at frequent intervals

Graham Metallic Traction Drives

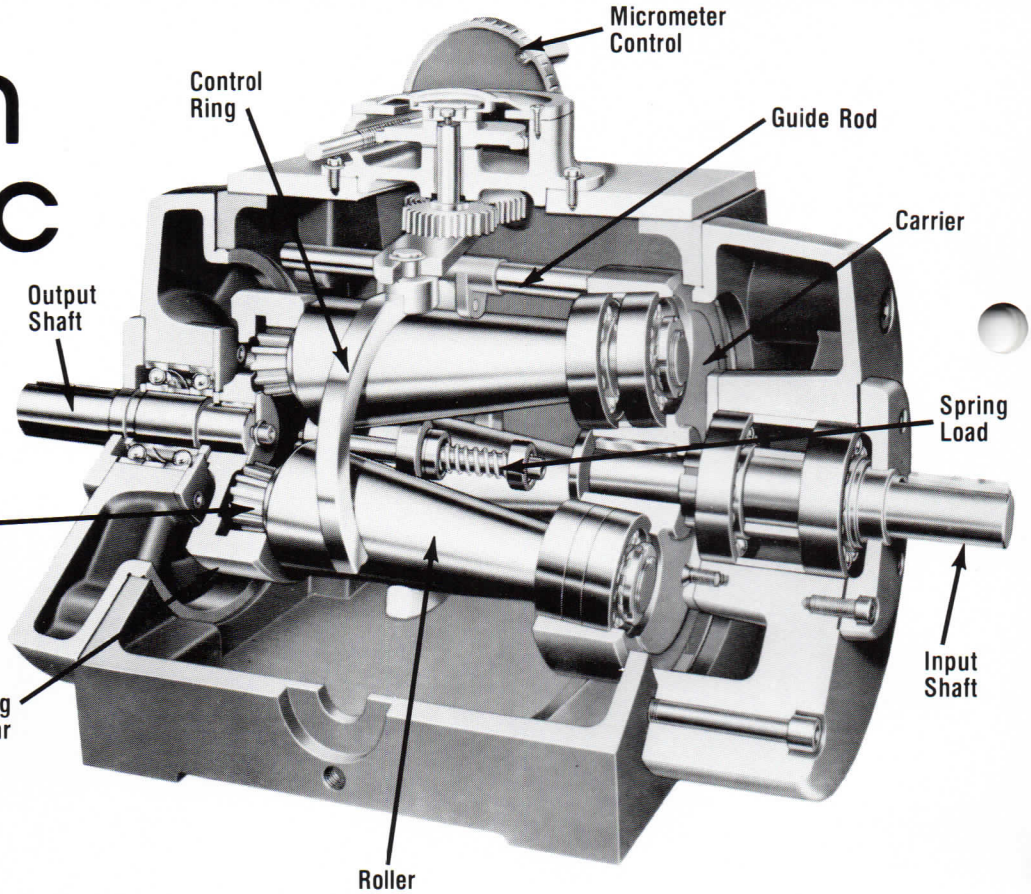

ENERGY EFFICIENT

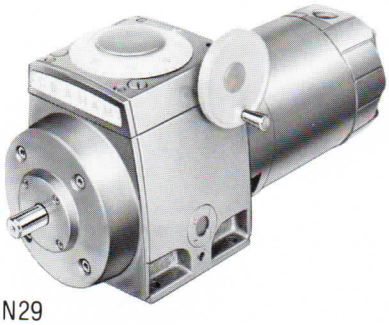

Series N29

drives, has perfected the Ring/Roller over the last 55 years.

Design Features	Operational Benefits
• **Infinite Speed Range**	Can operate at any output speed from full speed forward, to zero RPM, to full speed reverse
• **Full torque available to zero RPM**	No need to oversize drive for low speed operation
• **Control Ring Contacts Tapered Rollers**	Stepless speed control
• **Oil Lubricated and Cooled**	Efficient operation over wide temperature range —30°F to 120°F ambient.
• **Completely Mechanical**	Safe in hazardous enviroments when used with explosion proof motor
• **Wide Choice of Input Configurations**	Input Shaft, C-face, Integral motor designs to meet all requirements
• **Wide Choice of Output Configurations**	Right Angle reducers, helical reducers, and spur gear reducers and increasers provide the output torque and speed range required

Operating Principles

The cutaway photo and following text will help you understand how accurate speed settings are precisely obtained.

The Graham adjustable speed drive uses a dependable compound planetary gear system, except that the non-rotating member is a control ring which contacts tapered rollers. The control ring is moved lengthwise along the surface of the tapered rollers to change the speed.

The input shaft supports the carrier for the three tapered rollers. The tapered rollers are inclined at an angle equal to their taper so that their outer edge is maintained parallel to the central axis. The required traction pressure between tapered rollers and the control ring is obtained through the centrifugal force of the rollers. The pinion at the end of each tapered roller meshes with the ring gear which is a part of the output shaft.

Because the rollers move with the carrier, they orbit around the central axis at the input speed. Because of the traction between the rollers and the control ring, the rollers must at the same time rotate about their own axes in the opposite direction. Moving the control ring along the tapered rollers changes the speed of rotation of the rollers. This allows the ratio of the differential to be adjusted.

By varying the ratio of pinions-to-ring gear, various types of reversing and non-reversing drives can be obtained.

The tapered rollers are supported in matched and pre-loaded precision ball bearings for accurate alignment. Design tolerances are maintained by inspection and comparison check at each stage of assembly. Dynamic balancing of the roller carrier assembly assures trouble-free operation.

The output speed range of the drive may be changed by the addition of a built-in gear box. These precision built-in gear boxes may be used to either increase or decrease the output speed and torque. These compact gear boxes are made specially made for the R/R and feature precision balanced gears, housings and covers bored as a set for perfect alignment, and high overload capacity. These compact, high efficiency gear boxes are available in right angle, spur gear, and helical gear types in ratios up to 60:1.

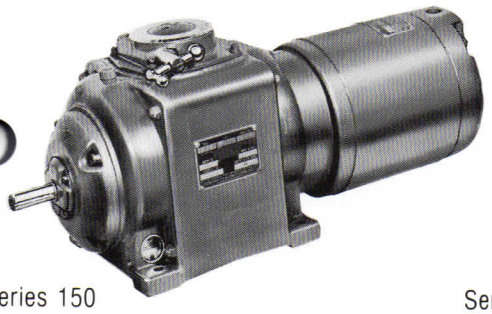

Series 150

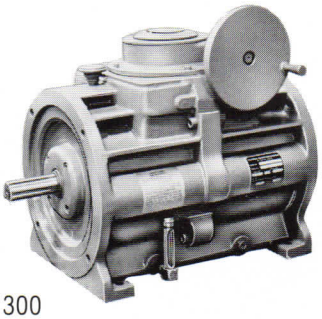

Series 300

How To Select

1. Determine Torque Required — for both starting and running

HOW TO DETERMINE TORQUE REQUIRED

Graham adjustable speed transmissions are rated by torque and speed developed at the transmission output shaft, rather than horsepower. Horsepower is the **rate** at which the motor is capable of doing work, while torque is a measure of **twisting force.**

To measure the torque required to drive a machine, mount a pulley on the shaft to be driven. Secure one end of a cord to the outer diameter of the pulley and wrap a few turns around the pulley. Attach the other end of the cord to a spring scale. Pull on the scale until the shaft turns. The force, in pounds, on the scale — times the pulley radius, in inches, is the twisting force, or torque, in inch-pounds. The torque may vary as the shaft rotates, and the highest value should be used in selecting the transmission.

The torque may also be calculated by this simple forumla:

$$\text{Inch pounds torque} = \frac{63025 \times HP}{RPM}$$

Determine the torque required for both starting and running. Torque ratings shown in this catalog are running torques. Starting torque ratings are approximately 75% of the running torque for a centrifugally loaded unit, and approximately 85% of the running torque for a spring-loaded unit.

Some applications require a constant torque drive or one that delivers increased torques at high speeds. Other applications require increased torques at low speeds. Graham drives are available to meet each of these requirements.

2. Determine Input Speed to R/R

Standard transmissions are designed for fixed input speed and normally are used with built-in or coupled 3450, 1750 or 1150 RPM motors. Lower input speed may be used, but output speed is directly proportional to the input speed. To find the maximum torque available from centrifugally loaded transmissions driven at less than rated input speed, multiply the catalog torque rating by:

$$\left(\frac{\text{Actual Input Speed}^2}{\text{Rated Input Speed}^2} \right)$$

When operating at low or variable input speeds, the transmission should be spring-loaded.

3. Determine Maximum Required Output Speed

The Graham gives all speeds from top to zero. However, in any application the driven shaft of the machine should turn at the maximum desired speed when the Graham is set to deliver approximately its top speed. This is necessary 1) to develop the full power of the transmission and 2) to distribute the speed range over the full operating length of the rollers and thus secure maximum accuracy and sensitivity of speed control. To accomplish this may require speed reduction or step up provided by means of an integral gear box, V-belt or chain and sprocket.

Direction of Rotation

Graham drives may be run in either direction of input. On drives without built-in gear boxes or with two-stage spur reduction, the output shaft rotates in the same direction as the driving motor.

On drives with built-in single spur reduction, the output shaft rotates in the opposite direction of the motor.

Direction of rotation on drives with built-in worm reduction depends on the arrangement selected.

The opposite of the above statements is true when the drive selected has the characteristics of "Increased torque at high speeds."

4. Determine Configuration Required

a. All units should be mounted horizontally. If necessary, use "L" or "U" type brackets to allow horizontal mounting. Special modifications are available for vertical, side, or other special mounting of most models. For special mounting, contact Graham Transmissions.

b. Input options include:
- Input shaft
- Integral motor
- C-face
- C-face with motor

How to Select

c. Speed control. For choice of mechanical speed control, see below.

Micrometer Control Position

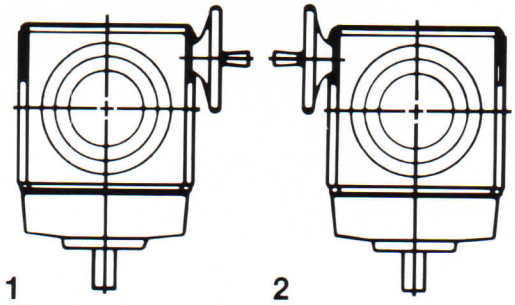

Viewed with output shaft towards bottom of page.

Remote Control Position

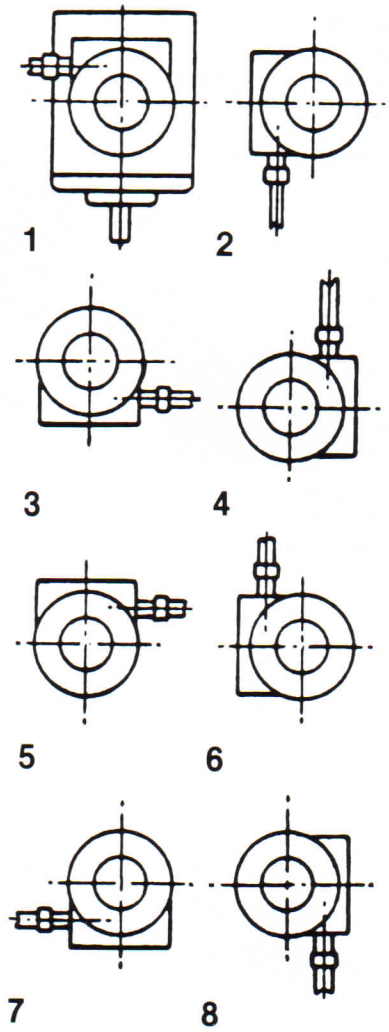

Positions 4 and 6 not available with single-phase motors. Positions 2 and 8 not available with T reducers or with worm reducers in Positions 1, 2 and 7, or with R reducers in Position 1. N29 series available in Positions 1 and 5 only. Specify length of flexible cable.

d. Specify position of output gear box, see below.

Worm Output (W)

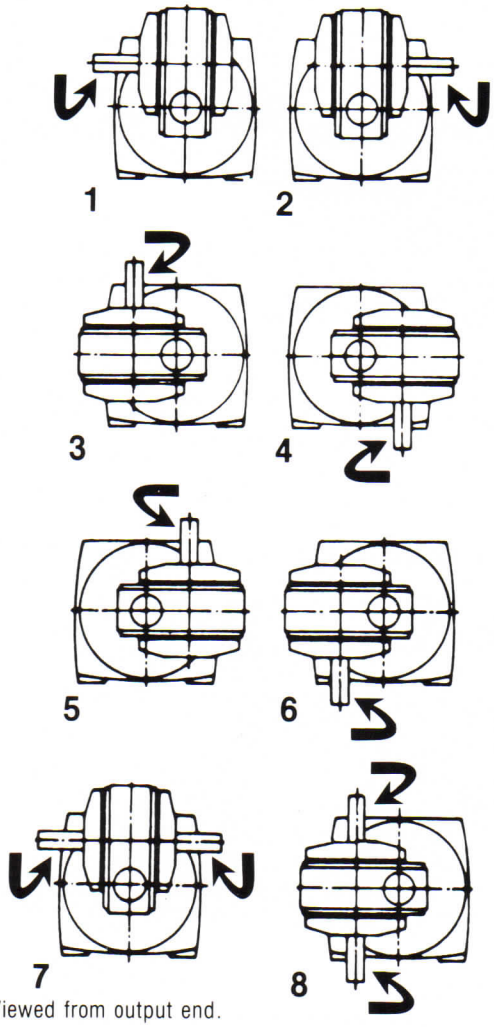

Viewed from output end.

Output shaft rotation with clockwise input. (For transmissions with increased torque at high speeds — rotation will be opposite.)

Single Reduction (R) or Step-up (S)

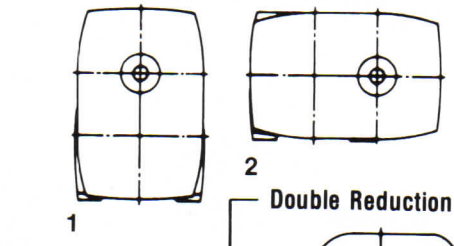

Double Reduction (T)

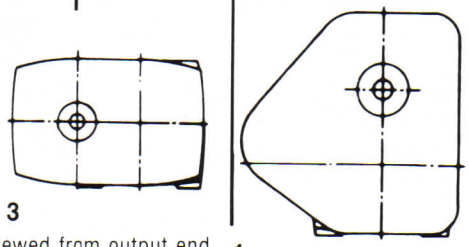

Viewed from output end.

Viewed from output end.

5. Specify motor characteristics

Speed Controls

The accurate, linear speed characteristics of the R/R demand a speed setting mechanism that gives you full control, exactly, time after time.

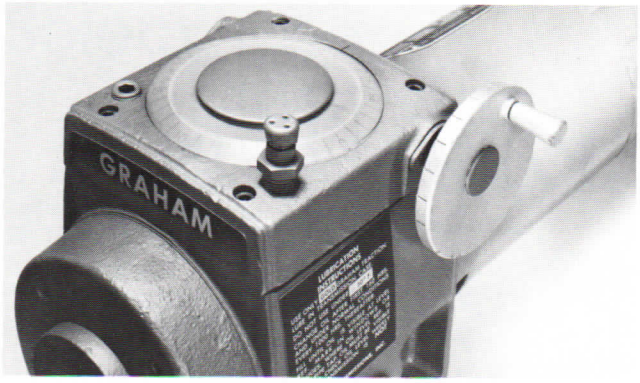

MICROMETER CONTROL
This control is offered as standard with all of the Graham drives. Approximately 35 turns of the control handwheel are required to shift full range. A linear speed-dial relationship can be furnished as special.

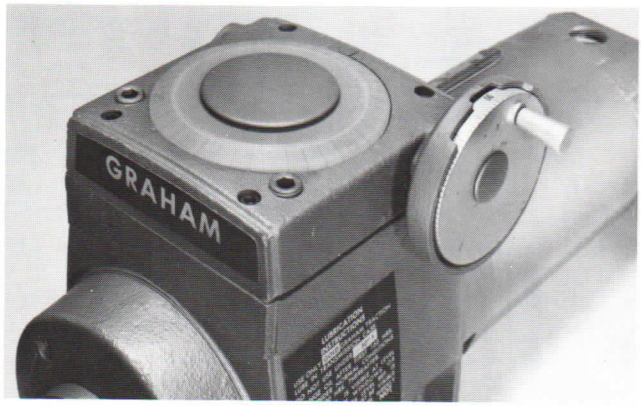

MICROMETER HANDWHEEL
Same as micrometer control except that handwheel has 100 graduations on the periphery of the control handle. This, along with the 35 graduations on the dial, enables speed to be read accurately to 1 part in 3,500.

Remote Controls

REMOTE MICROMETER
The micrometer control may be mounted at a remote point away from the transmission and connected to the transmission by means of flexible cable. Cable lengths from 1' to 6' are available with solid rod connection between cables for greater length.

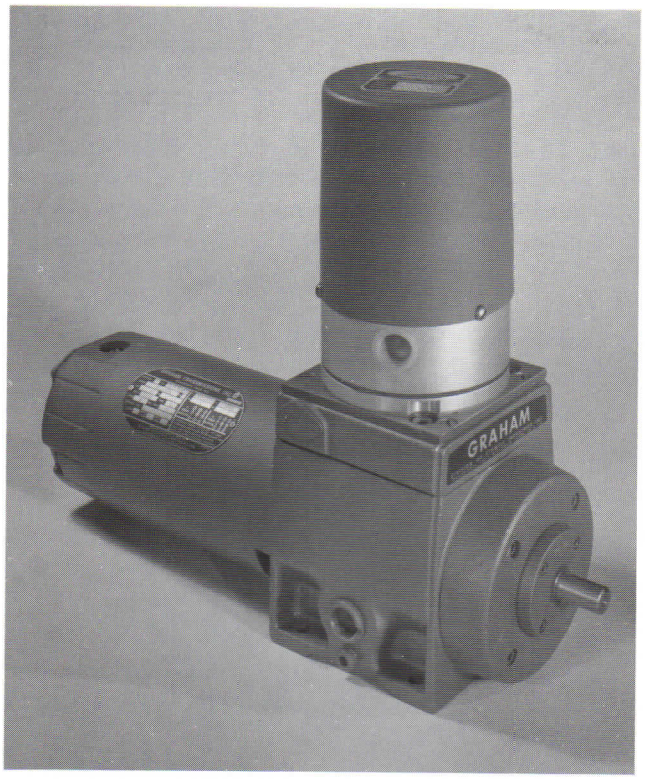

ELECTRIC CONTROL
The electric actuator mounts directly on the transmission. A simple method of controlling by dial or pushbutton is available. Systems to follow an external electrical signal are available.

Speed Reducers

Integral speed reducers and increasers provide the operating speed range and torque required.

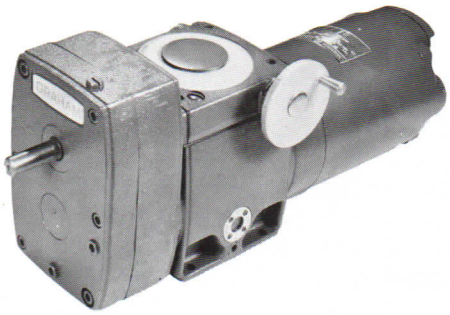

SINGLE STAGE SPUR GEAR REDUCER OR INCREASER

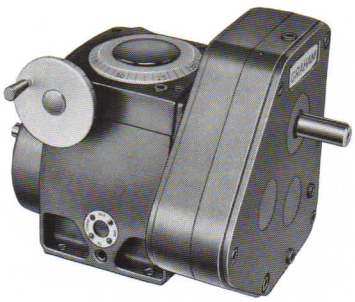

TWO STAGE HELICAL GEAR REDUCER

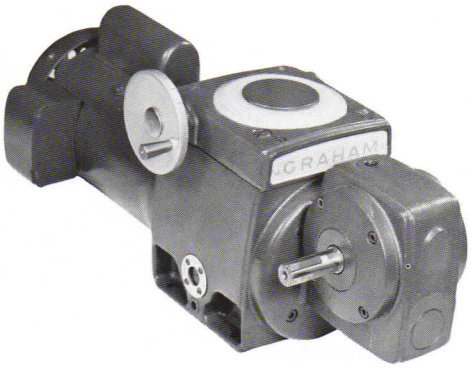

WORM REDUCER

Option Table

Symbol	Availability	Description	Application
A	**All Series**	Spring Loading The tapered rollers are held against the control ring by spring pressue rather than centrifugal force alone. Spring loaded drives should only be shifted while running. For units without reducers the spring add the following torque to those developed by centrifugal force alone. Series — Additional Torque at Maximum Speed (in. lb.) — Additional Torque at 1/10 Maximum Speed (in. lb.) N29 — 7 — 12 150 — 10 — 13 300 — 22 — 38	Use when input speed is lower than standard or is variable.
B	**All Series**	Mechanical Reversing All Graham drives can be operated in either input direction. Reversing can be done by reversing the motor after bringing the unit to a complete stop. Mechanical reversing units give equal output speeds, forward and reverse, without changing the input direction. Maximum speed, forward and reverse, is 60% of the maximum speed of the corresponding non-reversing drive. Torques over the range are about 90% of the torque developed at maximum speed by the non-reversing type. This mechanical reversing feature is available only on those models with increased torque at low speeds.	Use when controlled speed is required from forward operating speed, down to zero RPM and to reverse operating speed. Full control is available at all speeds in both directions.
C	**Series N29**	56 C-face Input	For direct connection of any NEMA 56 C-face motor.
D	**Series N29 and 150**	Heavy Spring Loading - See "A" above	For selected applications. Consult factory.
G	**All Series**	High Load Factor at Low Speeds Maximum speed is 60% of the speed for the corresponding non-reversing type drive of the type that produces increased torques at low speed. Torques over the range are about 90% of the torque developed at maximum speed of the type which produces increased torque at low speeds.	Use when drive will operate at the low end of the speed range most of the time.
H	**Series 150 and 300**	Heavy Duty The "H" feature reduces internal loading and also permits a low speed into reverse. Conventional gear reducers are usually selected one size larger when used for continuous duty under shock loads. In the R/R, this is accomplished by use of an "H" type drive or by reducing the output speed and therefore reducing the internal loading.	Use for continuous shock loads.
K	**Series N29 and 150**	Speed Corrector In a speed corrector, the pinions of the tapered rollers mesh with a sun gear on the output shaft instead of the ring gear as on standard models. The output range instead of being from 1/3 of input to sero, is then 3.5 times input to 2.5 times input, with about 80% of the torque capacity of the standard unit. These units have no overload capacity and must be applied with this thought in mind.	Use to provide very small speed changes with extreme accuracy.
M	**All Series**	Built-in Motor Allows shortest overall length. Basic motor is 3 phase, 230/460 volt, totally enclosed. Consult Graham for explosion-proof, single phase 115/230 volt, 208-230/460 volt, 380 volt, 575 volt, 50 cycle, weather-proof, chemical duty or brake motors.	Use when an integral motor is desired. Standard unit without motor has an input shaft.
R	**Series N29 and 150**	Single Stage Spur Gear Reducer Parallel shaft gear reducer	Reduces maximum output speed with corresponding torque increase.
T	**Series N29 and 150**	Two Stage Helical Gear Reducer Parallel shaft gear reducer	Reduces maximum output speed with corresponding torque increase.
W	**Series N29 and 150**	Worm Reducer Right angle gear reducer	Reduces maximum output speed with corresponding torque increase.

Series N29 1/6 to 1/4 HP

APPLICATION
with increased torque at LOW SPEEDS

input driving motor	speed range (rpm)	output torque (in-lbs.) at max. speed	output torque (in-lbs.) at 1/10 max. speed	model no. with motor	Figure no.
1/6 HP at 1750 rpm	2750 to 0	.5	1	N27MS5	II
	1320 to 0	1	2	N27MS2.4	II
	550 to 0	2.5	5	N27M	I
	230 to 0	12	11	N27MR2.4	II
	110 to 0	12	21	N27MR5	II
	55 to 0	22	40	N27MT10	III
	35 to 0	37	60	N27MT15	III
	22 to 0	65	100	N27MT25	III
	15 to 0	90	120	N27MT37	III
	110 to 0	8	13	N27MW5	IV
	46 to 0	15	25	N27MW12	IV
	24 to 0	23	35	N27MW23	IV
	12 to 0	37	52	N27MW45	IV
	9 to 0	47	62	N27MW60	IV
1/4 HP at 3450 rpm	5500 to 0	2	3.5	N29MS5	II
	2640 to 0	4	7	N29MS2.4	II
	1100 to 0	10	16	N29M	I
	450 to 0	20	35	N29MR2.4	II
	220 to 0	45	75	N29MR5	II
	110 to 0	90	150	N29MT10	III
	70 to 0	140	230	N29MT15	III
	44 to 0	240	390	N29MT25	III
	30 to 0	360	580	N29MT37	III
	220 to 0	30	50	N29MW5	IV
	92 to 0	60	100	N29MW12	IV
	48 to 0	120	190	N29MW23	IV
	24 to 0	160	260	N29MW45	IV
	18 to 0	220	300	N29MW60	IV
Spring-loaded models					
1/6 HP at 1750 rpm	2600 to 0	2	3.5	N28AMS5	II
	1250 to 0	4	7	N28AMS2.4	II
	525 to 0	12	18	N28AM	I
	218 to 0	27	42	N28AMR2.4	II
	105 to 0	55	85	N28AMR5	II
	52 to 0	110	170	N28AMT10	III
	35 to 0	170	270	N28AMT15	III
	21 to 0	280	450	N28AMT25	III
	14 to 0	400	650	N28AMT37	III
	105 to 0	35	55	N28AMW5	IV
	43 to 0	70	100	N28AMW12	IV
	22 to 0	140	200	N28AMW23	IV
	11 to 0	180	275	N28AMW45	IV
	8 to 0	250	340	N28AMW60	IV

APPLICATION
with increased torque at HIGH SPEEDS

input driving motor	speed range (rpm)	output torque (in-lbs.) at max. speed	output torque (in-lbs.) at 1/10 max. speed	model no. with motor	Figure no.
1/4 HP at 3450 rpm	8750 to 0	2	1	N30MS5	II
	4200 to 0	5	2.5	N30MS2.4	II
	1750 to 0	12	6	N30M	I
	730 to 0	30	15	N30MR2.4	II
	340 to 0	60	30	N30MR5	II
	175 to 0	120	60	N30MT10	III
	117 to 0	180	100	N30MT15	III
	70 to 0	300	150	N30MT25	III
	48 to 0	440	220	N30MT37	III
	350 to 0	45	22	N30MW5	IV
	146 to 0	100	48	N30MW12	IV
	76 to 0	165	75	N30MW23	IV
	39 to 0	240	120	N30MW45	IV
	29 to 0	270	130	N30MW60	IV
Spring-loaded models					
1/6 HP at 1750 rpm	4300 to 0	3	1.5	N30AMS5	II
	2100 to 0	6	3	N30AMS2.4	II
	875 to 0	15	8	N30AM	I
	360 to 0	36	19	N30AMR2.4	II
	170 to 0	75	40	N30AMR5	II
	87 to 0	150	80	N30AMT10	III
	57 to 0	225	120	N30AMT15	III
	35 to 0	370	200	N30AMT25	III
	23 to 0	550	290	N30AMT37	III
	175 to 0	46	20	N30AMW5	IV
	73 to 0	75	40	N30AMW12	IV
	38 to 0	145	75	N30AMW23	IV
	19 to 0	230	125	N30AMW45	IV
	14 to 0	225	140	N30AMW60	IV

SPEED CORRECTOR RATINGS

Option "K" See page 7

Only a few reducer ratios are shown below.
All other ratios shown above are available.

input driving motor	speed range (rpm) max.	speed range (rpm) min.	torque in.lbs.	model no. with motor	Figure no.
1/6 HP at 1750 rpm*	6150	4700	3	N29KM	I
	1230	940	15	N29KMR5	II
	245	188	75	N29KMT25	III
	166	127	111	N29KMT37	III
	510	390	16	N29KMW12	IV
less motor† input 100 rpm	350	270	7	N28AK	I
	68	52	35	N28AKR5	II
	14	11	175	N28AKT25	III
	10	8	259	N28AKT37	III
	29	23	38	N28AKW12	IV

*Or coupled 1750 rpm motors up to 1/2 hp.
†For other input speeds, multiply output speed in table by input speed, divided by 100.

C FACE TYPE
NEMA 56C face, N29C

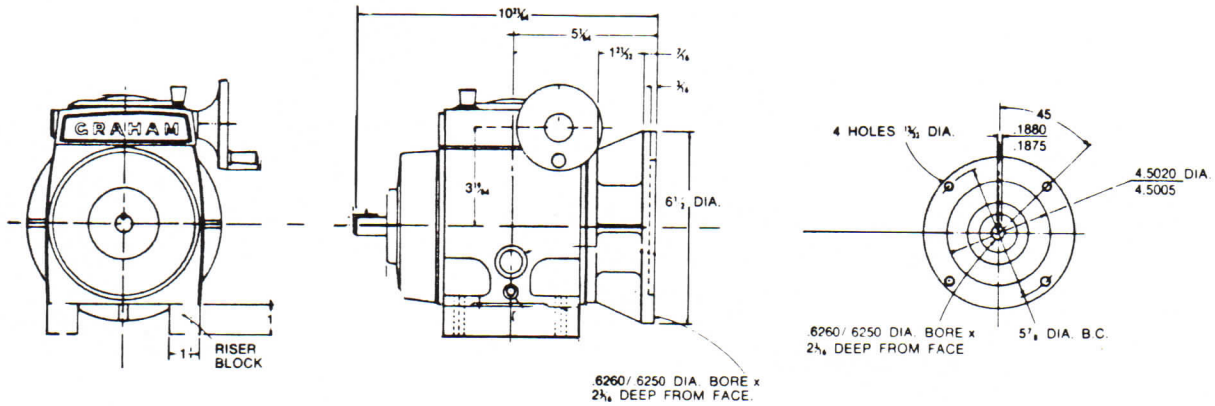

Series N29 Dimensions

STANDARD OUTPUT — Figure I

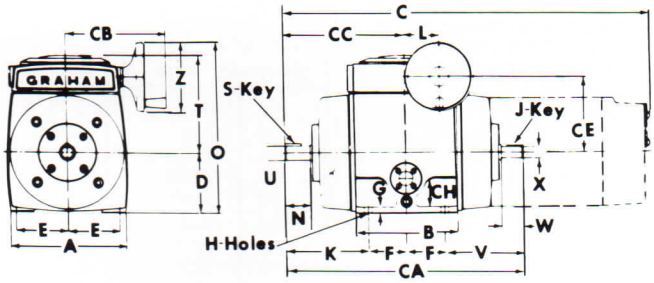

R and S OUTPUT
(Helical Reduction and Step-Up) — Figure II

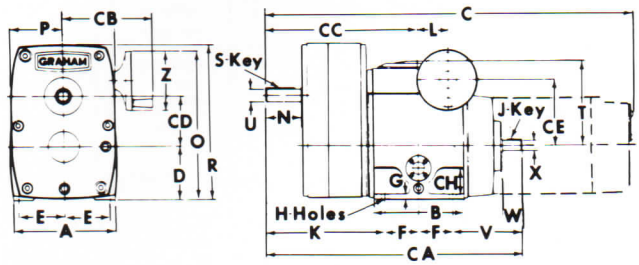

T OUTPUT (Double Helical Reduction) — Figure III

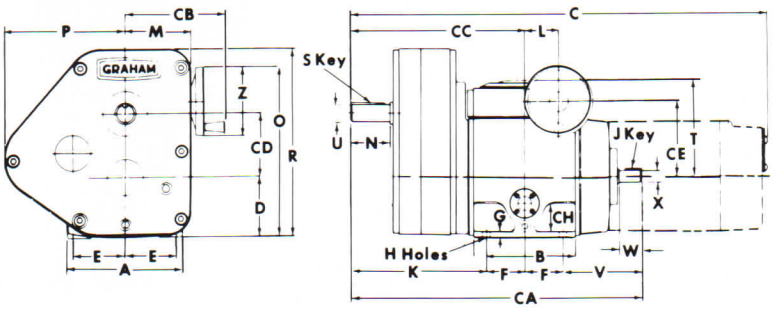

W OUTPUT (Worm Reduction) — Figure IV

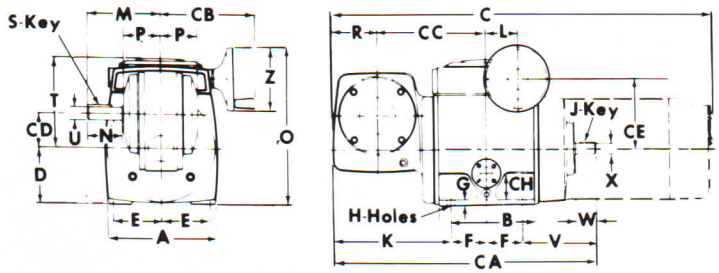

Note: The control housing is rotated 180° when linear control is furnished.

	standard	R & S	T	W
Figure	I	II	III	IV
A	5	5	5	5
B	4 1/2	4 1/2	4 1/2	4 1/2
C	* 15 3/16	* 17 15/32	* 17 15/32	* 7 7/64
D	2 5/8	2 5/8	2 5/8	2 5/8
E	2 1/4	2 1/4	2 1/4	2 1/4
F	1 11/16	1 11/16	1 11/16	1 11/16
G	1/4	1/4	1/4	1/4
H	11/32	11/32	11/32	11/32
J	1/8 x 1/8	1/8 x 1/8	1/8 x 1/8	1/8 x 1/8
K	3 5/8	5 29/32	5 29/32	5 35/64
L	1 33/64	1 33/64	1 33/64	1 33/64
M			2 7/8	3 13/32
N	1 1/8	1 3/4	1 3/4	1 5/8
O	7 27/64	7 27/64	7 27/64	7 27/64
P		5 1/8	5 5/16	1 11/16
R		7 3/4	8 1/4	2 3/32
S	3/16 x 3/16	3/16 x 3/16	3/16 x 3/16	3/16 x 3/16
T	4 13/64	4 13/64	4 13/64	4 13/64
U	.6250 .6245	.6250 .6245	.7500 .7495	.6250 .6245
V	3 1/2	3 1/2	3 1/2	3 1/2
W	1	1	1	1
X	.5000 .4995	.5000 .4995	.5000 .4995	.5000 .4995
Z	3	3	3	3
CA	10 1/2	12 25/32	12 25/32	12 27/64
CB	4 13/32	4 13/32	4 13/32	4 13/32
CC	5 5/16	7 19/32	7 19/32	5 9/64
CD		2 17/32	2 49/64	1 19/32
CE	3 19/64	3 19/64	3 19/64	3 19/64
CH	1 1/4	1 1/4	1 1/4	1 1/4
Approx. Wt. Less Motor	29	44	65	36
Wt. Complete With Motor	49	74	85	56

Dimensions subject to change. Ask for certified drawings for installation.

*Dimensions vary with motor

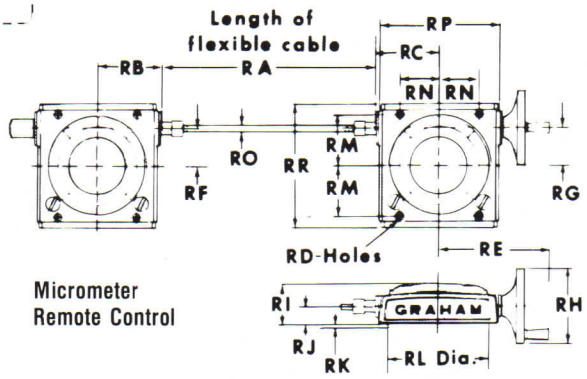

Micrometer Remote Control

Model	RA	RB	RC	RD	RE	RF	RG	RH	RI	RJ	RK	RL	RM	RN	RO	RP	RR
N27, N28, N29 and N30	*	2 5/8	2 5/8	7/32	4 13/32	1 33/64	1 33/64	3	1 5/8	23/32	1/8	4	2 1/16	1 9/16	1/4	4 3/4	5

*Standard cable lengths available are 12", 18", 24", 36", 48", 60", and 72". For control beyond 72" consult factory. Minimum operating radius of cable 3 1/4".

Series 150 1/4 to 1-1/2 HP

APPLICATIONS with increased torque at LOW SPEEDS

input driving motor	speed range (rpm)	output torque (in-lbs.) at max. speed	output torque (in-lbs.) at 1/10 max. speed	model no. with motor	Figure no.
1/4 HP at 1150 rpm	1000 to 0	10	23	125HMS2.8	II
	360 to 0	30	65	125HM	I
	125 to 0	85	180	125HMR2.8	II
	72 to 0	150	325	125HMR5	II
	51 to 0	210	455	125HMR7	II
	25 to 0	420	910	125HMT14	II
	18 to 0	600	1300	125HMT20	III
	14 to 0	750	1625	125HMT25	III
	10 to 0	1050	2275	125HMT35	III
	7 to 0	1500	3250	125HMT50	III
	72 to 0	100	185	125HMW5	IV
	32 to 0	250	465	125HMW12	IV
	20 to 0	310	575	125HMW18	IV
	6.5 to 0	700	1300	125HMW54	IV
1/2 HP at 1150 rpm	1230 to 0	16	32	150MS2.8	II
	440 to 0	45	90	150M	I
	150 to 0	115	230	150MR2.8	II
	88 to 0	225	450	150MR5	II
	63 to 0	300	600	150MR7	II
	31 to 0	610	1250	150MT14	III
	22 to 0	880	1760	150MT20	III
	18 to 0	1100	2200	150MT25	III
	13 to 0	1540	3180	150MT35	III
	9 to 0	2200	4500	150MT50	III
	90 to 0	180	360	150MW5	IV
	37 to 0	360	720	150MW12	IV
	25 to 0	525	1050	150MW18	IV
	8 to 0	1100	2200	150MW54	IV
3/4 HP at 1750 rpm	1400 to 0	23	50	175HMS2.8	II
	510 to 0	65	140	175HM	I
	180 to 0	180	390	175HMR2.8	II
	100 to 0	325	700	175HMR5	II
	70 to 0	455	980	175HMR7	II
	36 to 0	910	1960	175HMT14	III
	25 to 0	1300	2800	175HMT20	III
	20 to 0	1625	3500	175HMT25	III
	14 to 0	2275	5000*	175HMT35	III
	10 to 0	3250	6000*	175HMT50	III
	100 to 0	310	620	175HMW5	IV
	42 to 0	670	1340	175HMW12	IV
	28 to 0	930	1860	175HMW18	IV
	9 to 0	2100	2600*	175HMW54	IV
1 HP at 1750 rpm	1800 to 0	30	65	200MS2.8	II
	650 to 0	85	180	200M	I
	230 to 0	240	500	200MR2.8	II
	130 to 0	425	900	200MR5	II
	93 to 0	600	1000*	200MR7	II
	47 to 0	1190	2520	200MT14	III
	33 to 0	1700	3600	200MT20	III
	26 to 0	2125	4000*	200MT25	III
	19 to 0	2975	4000*	200MT35	III
	13 to 0	4250	6000*	200MT50	III
	130 to 0	390	780	200MW5	IV
	54 to 0	850	1700	200MW12	IV
	36 to 0	1200	2400	200MW18	IV
	12 to 0	2600*	2600*	200MW54	IV
1½ HP at 1750 rpm	1800 to 0	35	75	250MS2.8	II
	650 to 0	100	220	250M	I
	230 to 0	280	615	250MR2.8	II
	130 to 0	500	1000*	250MR5	II
	93 to 0	700	1000*	250MR7	II
	47 to 0	1400	3080	250MT14	III
	33 to 0	2000	4000*	250MT20	III
	26 to 0	2500	4000*	250MT25	III
	19 to 0	3500	6000*	250MT35	III
	13 to 0	5000	8000	250MT50	III
	130 to 0	450	900	250MW5	IV
	54 to 0	1000	2000	250MW12	IV
	36 to 0	1600	2600*	250MW18	IV
	12 to 0	2600*	2600*	250HMW54	IV

*This torque rating is limited by the strength of the reducer.

APPLICATIONS with increased torque at HIGH SPEEDS

input driving motor	speed range (rpm)	output torque (in-lbs.) at max. speed	output torque (in-lbs.) at 1/10 max. speed	model no. with motor	Figure no.
1/2 HP at 1150 rpm	1820 to 0	18	10	130MS2.8	II
	650 to 0	45	30	130M	I
	232 to 0	130	85	130MR2.8	II
	130 to 0	240	150	130MR5	II
	92 to 0	330	210	130MR7	II
	46 to 0	660	420	130MT14	III
	32 to 0	950	600	130MT20	III
	26 to 0	1160	750	130MT25	III
	18 to 0	1620	1100	130MT35	III
	13 to 0	2350	1500	130MT50	III
	130 to 0	225	135	130MW5	IV
	54 to 0	475	280	130MW12	IV
	36 to 0	700	420	130MW18	IV
	12 to 0	1800	1150	130MW54	IV
3/4 HP at 1750 rpm	2800 to 0	16	16	160MS2.8	II
	1000 to 0	48	45	160M	I
	350 to 0	135	125	160MR2.8	II
	200 to 0	215	220	160MR5	II
	140 to 0	330	315	160MR7	II
	70 to 0	650	630	160MT14	III
	50 to 0	925	900	160MT20	III
	40 to 0	1150	1100	160MT25	III
	28 to 0	1680	1550	160MT35	III
	20 to 0	2300	2200	160MT50	III
	200 to 0	200	180	160MW5	IV
	83 to 0	500	450	160MW12	IV
	55 to 0	750	620	160MW18	IV
	18 to 0	2000*	1500	160MW54	IV
1 HP at 1750 rpm	2800 to 0	23	16	190MS2.8	II
	1000 to 0	60	45	190M	I
	350 to 0	175	125	190MR2.8	II
	200 to 0	305	220	190MR5	II
	140 to 0	435	315	190MR7	II
	70 to 0	875	630	190MT14	III
	50 to 0	1225	900	190MT20	III
	40 to 0	1530	1100	190MT25	III
	28 to 0	2200	1550	190MT35	III
	20 to 0	3100	2200	190MT50	III
	200 to 0	275	180	190MW5	IV
	83 to 0	650	450	190MW12	IV
	55 to 0	1000	620	190MW18	IV
	18 to 0	2600*	1500	190MW54	IV
1½ HP at 1750 rpm	2800 to 0	44	16	230MS2.8	II
	1000 to 0	90	45	230M	I
	350 to 0	270	125	230MR2.8	II
	200 to 0	500	225	230MR5	II
	140 to 0	880	315	230MR7	II
	70 to 0	1400	630	230MT14	III
	50 to 0	2000	900	230MT20	III
	40 to 0	2400	1120	230MT25	III
	28 to 0	3300	1570	230MT35	III
	20 to 0	4000*	2240	230MT50	III
	200 to 0	390	180	230MW5	IV
	83 to 0	1100	450	230MW12	IV
	55 to 0	1600	620	230MW18	IV
	18 to 0	2600*	1500	230MW54	IV

SPEED CORRECTOR RATINGS Option "K" See page 7

APPLICATIONS with increased torque at LOW SPEEDS

input driving motor	speed range (rpm) max.	speed range (rpm) min.	torque in lbs.	model no. with motor	Figure no.
1½ HP at 1150 rpm*	4000	2800	15	150KM	I
	800	560	75	150KMR5	II
	160	115	375	150KMT25	III
	80	56	750	150KMT50	III
	320	230	80	150KMW12	IV
less motor† input 100 rpm	330	240	20	150AK	I
	66	48	100	150AKR5	II
	13	10	500	150AKT25	III
	7	5	1250	150AKT50	III
	27	20	110	150AKW12	IV

*Or coupled 1750 rpm motors up to ½ hp.

†For other input speeds, multiply output speed in table by input speed, divided by 100.

Series 150 Dimensions

STANDARD OUTPUT — Figure I

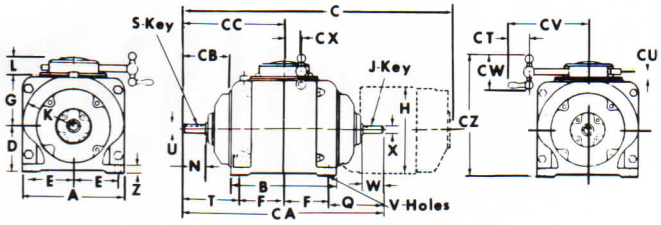

R and S OUTPUT (Spur Reduction and Step-Up) — II

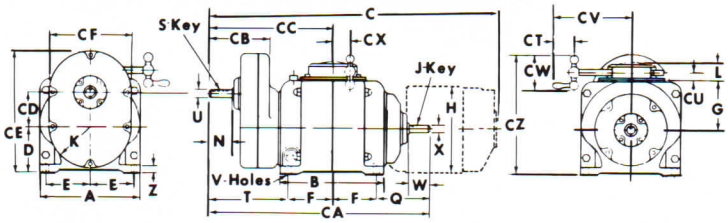

T OUTPUT (Double Spur Reduction) — Figure III

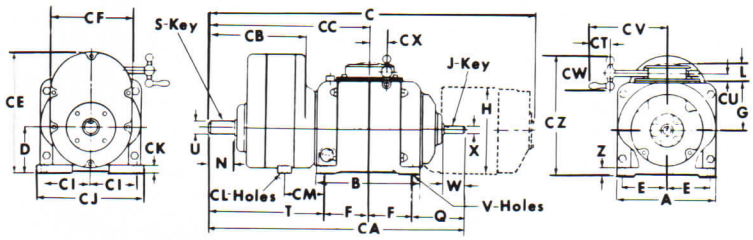

W OUTPUT (Worm Reduction) — Figure IV

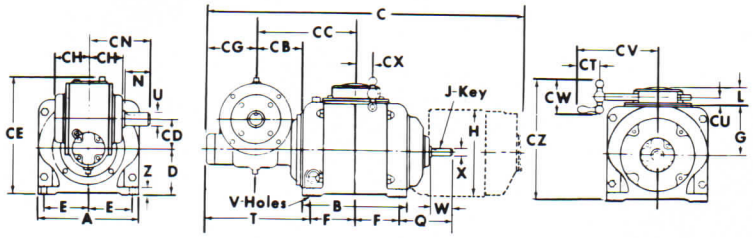

	standard	R & S	T	W
Figure	I	II	III	IV
A	8 3/4	8 3/4	8 3/4	8 3/4
B	9 5/32	9 5/32	9 5/32	9 5/32
C	*23 7/16	*25 17/32	*28 5/8	*27 21/32
D	4	4	4	4
E	3 7/8	3 7/8	3 7/8	3 7/8
F	3 7/8	3 7/8	3 7/8	3 7/8
G	4 3/8	4 3/8	4 3/8	4 3/8
H	*6 3/8	*6 3/8	*6 3/8	*6 3/8
J-Key	3/16 x 3/16	3/16 x 3/16	3/16 x 3/16	3/16 x 3/16
K	4 3/8	3 9/16	3 9/16	3 1/8
L	1 1/2	1 1/2	1 1/2	1 1/2
N	2	2	2 1/4	2 1/4
Q	4 23/32	4 23/32	4 23/32	4 23/32
S-Key	3/16 x 3/16	3/16 x 3/16	1/4 x 1/4	1/4 x 1/4
T	4 7/8	6 31/32	10 1/16	9 3/32
U	.7500 .7495	.7500 .7495	1.1250 1.1245	1.1250 1.1245
V-Holes	17/32	17/32	17/32	17/32
W	1 7/8	1 7/8	1 7/8	1 7/8
X	.6250 .6245	.6250 .6245	.6250 .6245	.6250 .6245
Z	5/8	5/8	5/8	5/8
CA	17 11/32	19 7/16	22 17/32	21 9/16
CB	4 3/64	5 9/32	8 3/8	4
CC	8 3/4	10 27/32	13 15/16	8 23/32
CD		3.031		2.625
CE		10 19/32	10 19/32	10 1/4
CF		7 1/8	7 1/8	
CG				4 1/4
CH				2 31/32
CI			4 1/16	
CJ			9 3/8	
CK			5/8	
CL-Holes			9/16	
CM			4 17/32	
CN				5 11/32
CT	1 13/32	1 13/32	1 13/32	1 13/32
CU	21/32	21/32	21/32	21/32
CV	6 11/32	6 11/32	6 11/32	6 11/32
CW	3 1/16	3 1/16	3 1/16	3 1/16
CX	1 1/2	1 1/2	1 1/2	1 1/2
CZ	10 19/32	10 19/32	10 19/32	10 19/32
Approx. Wt. Less Motor	75	90	130	110
Wt. Complete With Motor	125	140	180	170

*These Dimensions are approximate and are dependent on motor type and manufacturer.

Micrometer Remote Control

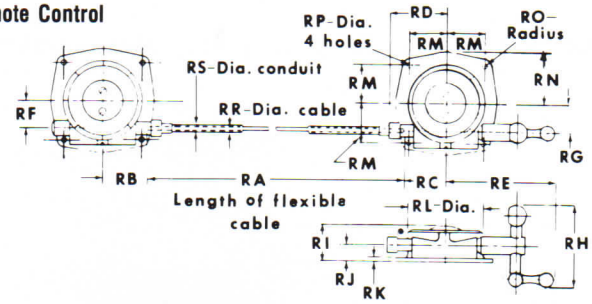

Dimensions subject to change. Ask for certified drawings for installation.

Series	150	300
RA	*	*
RB	1 17/16	1 5/8
RC	1 7/16	1 5/8
RD	2 11/16	2 11/16
RE	4 7/16	4 7/16
RF	1 1/2	2 9/64
RG	1 1/2	1 1/2
RH	3 1/16	3 1/16
RI	1 1/2	1 1/2

Series	150	300
RJ	21/32	21/32
RK	3/16	3/16
RL	4 3/16	4 3/16
RM	2.219	2.219
RN	2 29/32	2 29/32
RO	5/16	5/16
RP	11/32	11/32
RR	.250	.250
RS	.445	.445

*Standard cable lengths available are 12", 18", 24", 36", 48", 60", and 72". For control beyond 72" consult factory. Minimum operating radius of cable 4".